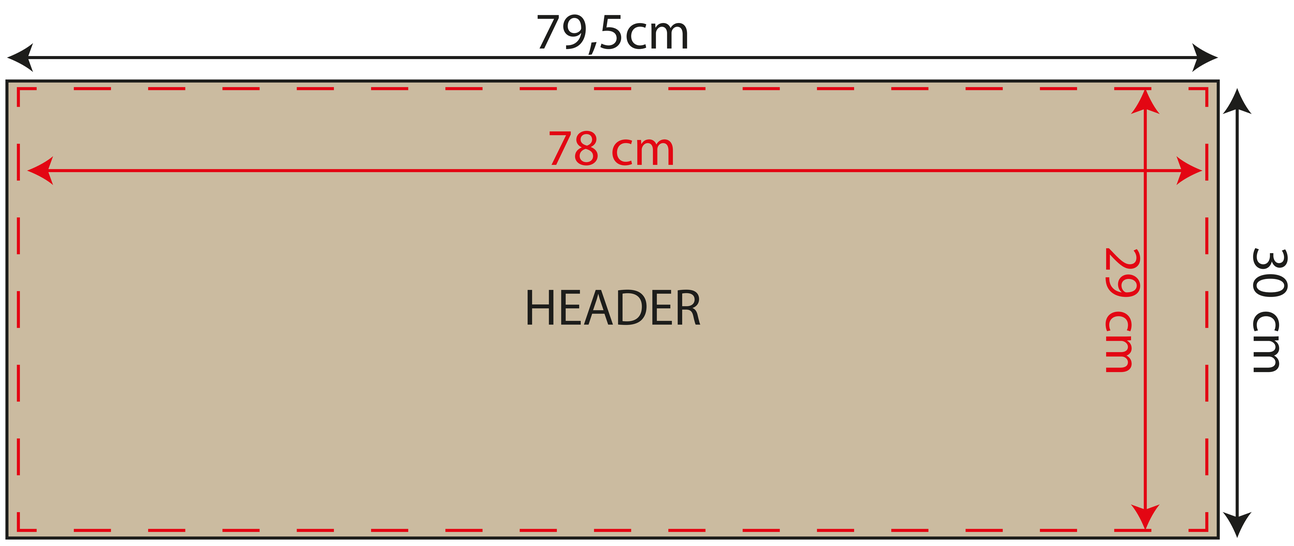

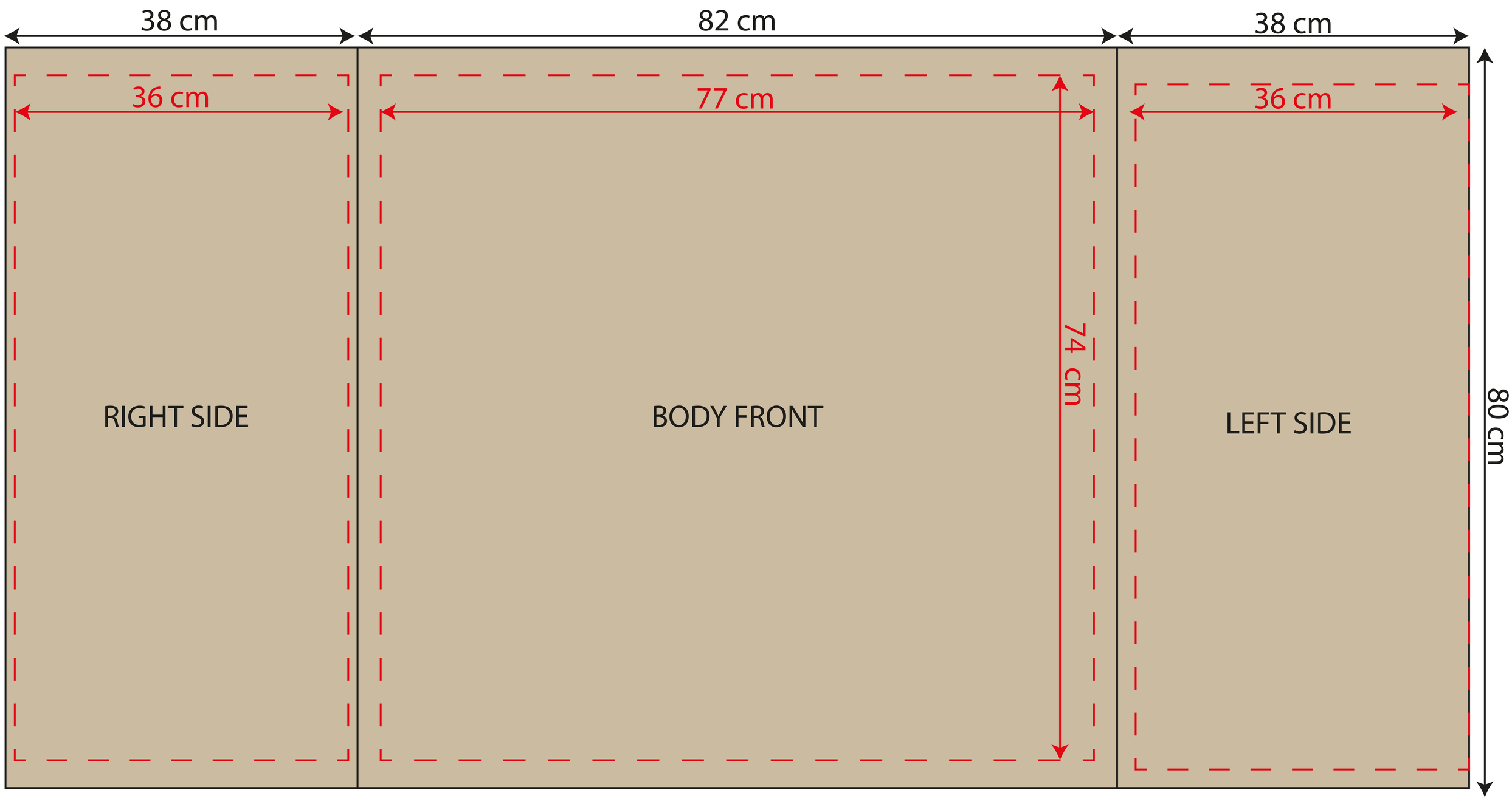

ARTWORK DIMENSION

SAFE MARGINS. (NO TEXT OR LOGO beyond this point.)

European Bank
for Reconstruction and Development
SUMMER
European Bank
for Reconstruction and Development
EBRD Annual Meeting 2019
Sarajevo, Bosnia & Herzegovina